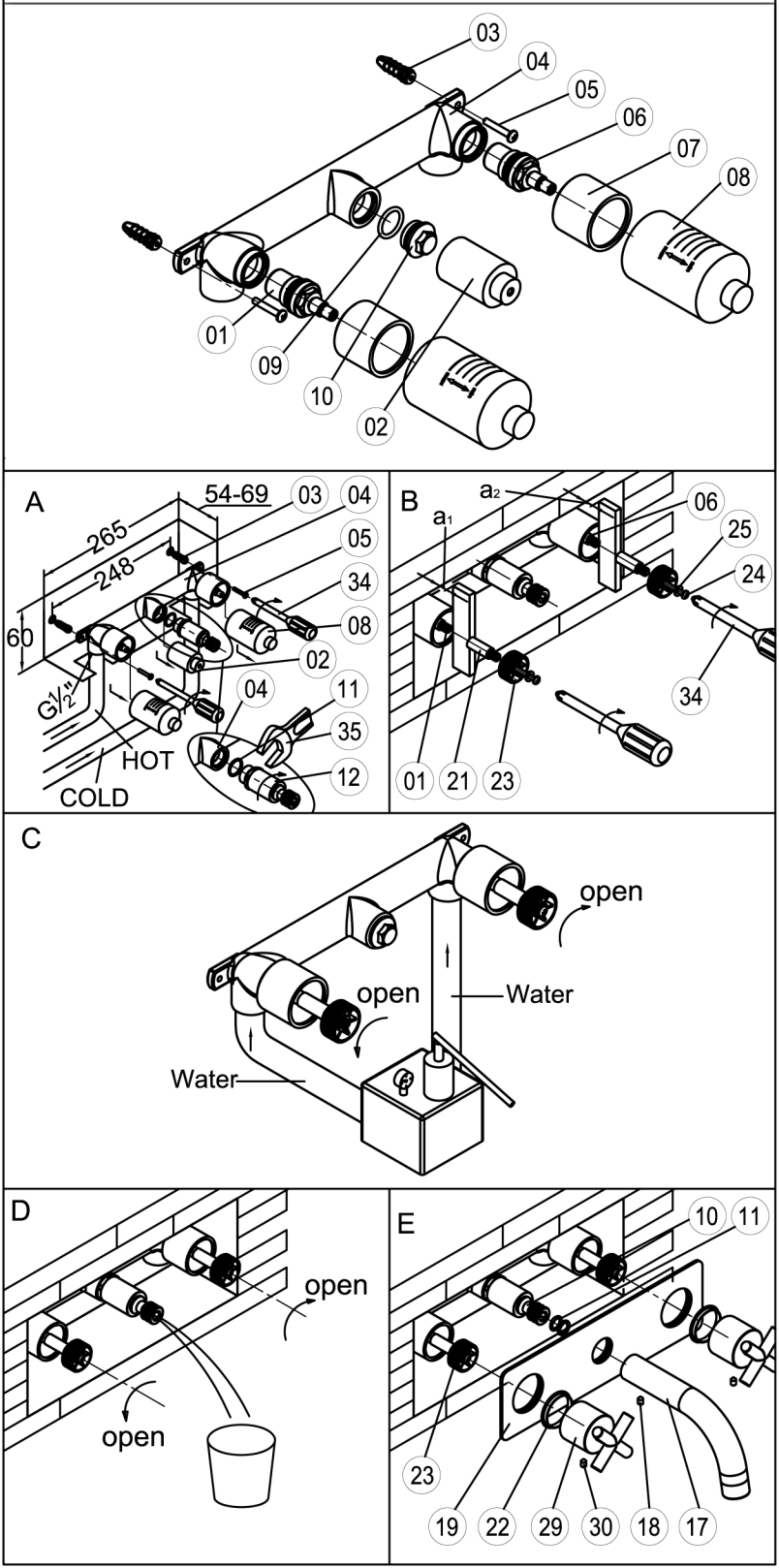
03
04
05
06
07
08
01
09
10
02
A
54-69
265
248
60
G1/2"
HOT
COLD
03
04
05
34
08
02
04
11
35
12
B
a1
a2
06
25
24
34
01
21
23
C
open
open
Water
Water
D
open
open
E
10
11
23
19
22
29
30
18
17